COPYRIGHT 2025 DRAFTWORKS LLC

A	A	A	REV
3	2	1	SH

REV STATUS

REVISION HISTORY

ZONE	REV	DESCRIPTION	DATE	APPROVE
		INITIAL RELEASE	10/18/23	PB
	A	NOR 10-250425	4/25/26	JH

CAD MAINTAINED. CHANGES SHALL BE INCORPORATED BY THE DESIGN ACTIVITY.

NOTES: UNLESS OTHERWISE SPECIFIED

1. INTERPRET DRAWING IAW MIL-STD-100. CLASSIFICATION PER MIL-T-31000, PARA 3.6.4
2. DIMENSIONING AND TOLERANCING PER ASME Y14.5-2009
3. PARTS TO BE FREE OF BURRS AND SHARP EDGES
4. MATERIAL: STEEL, 4.00 X 1/4 THK, HOT ROLLED, IN ACCORDANCE WTH ASTM A-36
5. FINISH: PASSIVATE PER ASTM A380
6. APPLY LOCTITE 609 TO THREADS BEFORE INSTALLATION
7. TORQUE FASTENERS TO 10 IN-LBF

ASSEMBLY NOTES START ON SHEET 2

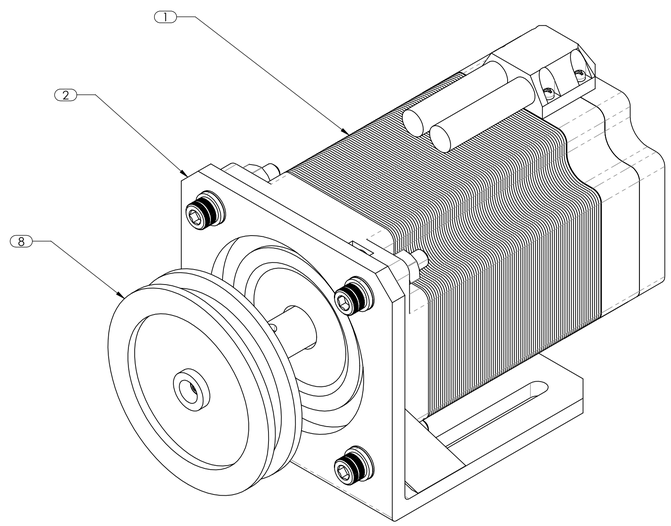

DRIVER SUBASSEMBLY

PARTS LIST DOCUMENT NUMBER M20260425

202604	SCSP
NEXT ASSY	USED ON
APPLICATION	

INTERPRET DRAWING PER ASME Y14.100

UNLESS OTHERWISE SPECIFIED

REMOVE ALL BURRS
MEET DIM BEFORE FINISH

MATERIAL
SEE NOTES

FINISH
SEE NOTES

DIMENSIONS ARE IN INCHES
2 PL ± .XX 3 PL ± .XXX
INTERPRET DIM AND TOL PER
ASME Y14.5M

THIRD ANGLE PROJECTION

PROJECT NAME: HACKATHON

	NAME	DATE
DRAFTER	T. STARK	8/2/23
CHECKER	S. ROGERS	8/13/23
ENGINEER	N. ROMANOFF	8/13/23
MFG.	B. BANNER	9/4/23
QUALITY	P. PARKER	9/12/23
DOC CNTRL	C. BARTON	9/27/23

COMMENTS

DRAFTWORKS
BOSTON, MA

TITLE
DRIVER SUBASSEMBLY

SIZE D | DRAWING NUMBER 20260425 | REV A

SCALE: 1:1 | CAD FILE | SHEET 1 OF 3

PROPRIETARY AND CONFIDENTIAL

THE INFORMATION CONTAINED IN THIS DRAWING IS THE SOLE PROPERTY OF DRAFTWORKS LLC. ANY REPRODUCTION IN PART OR AS A WHOLE WITHOUT THE WRITTEN PERMISSION OF DRAFTWORKS LLC IS PROHIBITED.

SOLIDWORKS Educational Product. For Instructional Use Only.

COPYRIGHTED - SEE SHEET 1

REVISION HISTORY				
ZONE	REV	DESCRIPTION	DATE	APPROVE
-	-	SEE SHEET 1	-	-

ASSEMBLY NOTES:

1. FASTEN MOTOR (ITEM NUMBER 1) TO ANGLE BRACKET (ITEM NUMBER 2) WITH PROVIDED HARDWARE. USE CABLE C23 FOR ORIENTATION

ASSEMBLY NOTES CONTINUED ON SHEET 3

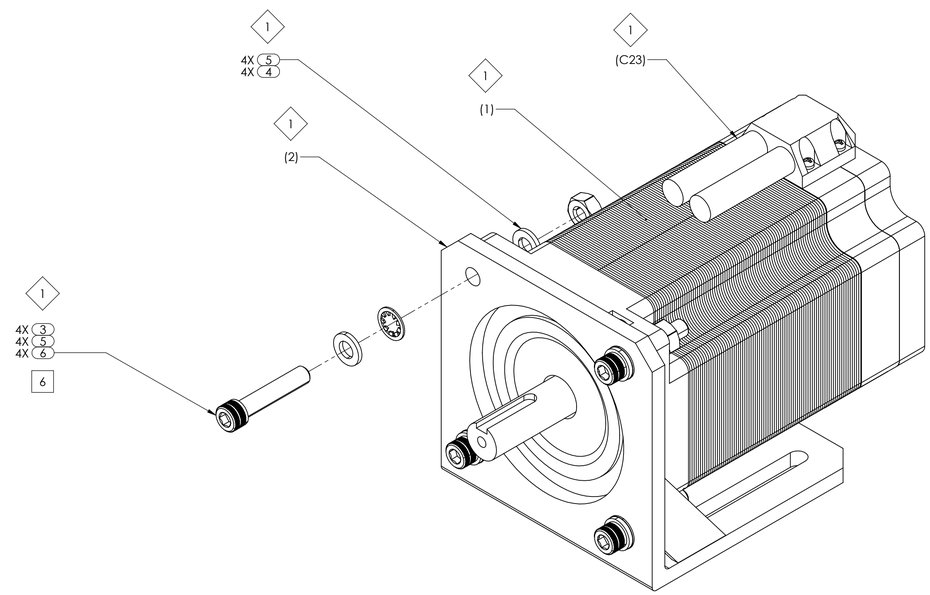

MOTOR TO ANGLE BRACKET CONNECTION

DRAFTWORKS
BOSTON, MA

TITLE
DRIVER SUBASSEMBLY

SIZE	DRAWING NUMBER	REV
D	20260425	A

SCALE: 1:2	CAD FILE	SHEET 2 OF 3

SOLIDWORKS Educational Product. For Instructional Use Only.

COPYRIGHTED - SEE SHEET 1

REVISION HISTORY				
ZONE	REV	DESCRIPTION	DATE	APPROVE
-	-	SEE SHEET 1	-	-

ASSEMBLY NOTES:

1. CLEAN WITH ISOPROPYL ALCOHOL [CHEM-9857]. ALLOW TO DRY 5 MINUTES MINIMUM
2. PRESS FIT MACHINE KEY (ITEM NUMBER 7) INTO MOTOR SHAFT
3. ALIGN KEY CUTOUT AND SLIDE PULLEY (ITEM NUMBER 6) OVER MOTOR SHAFT
4. FASTEN PULLEY (ITEM NUMBER 8) WITH PROVIDED HARDWARE

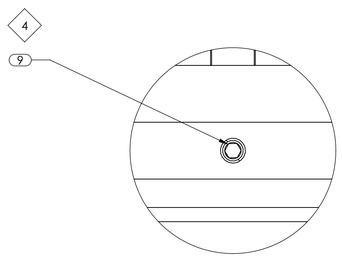

DETAIL D
SCALE 3 : 1
CLOSEUP OF SET SCREW

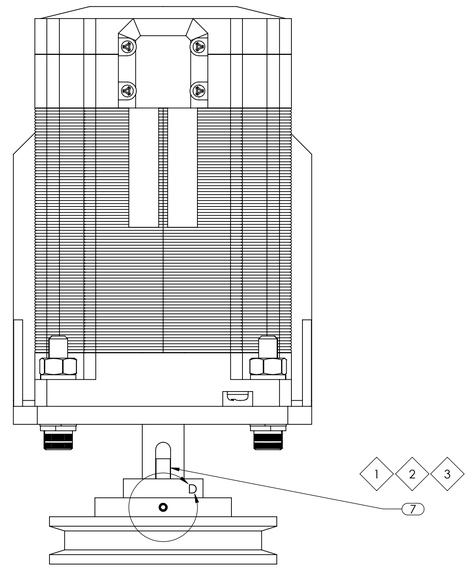

TOP VIEW OF SUBASSEMBLY

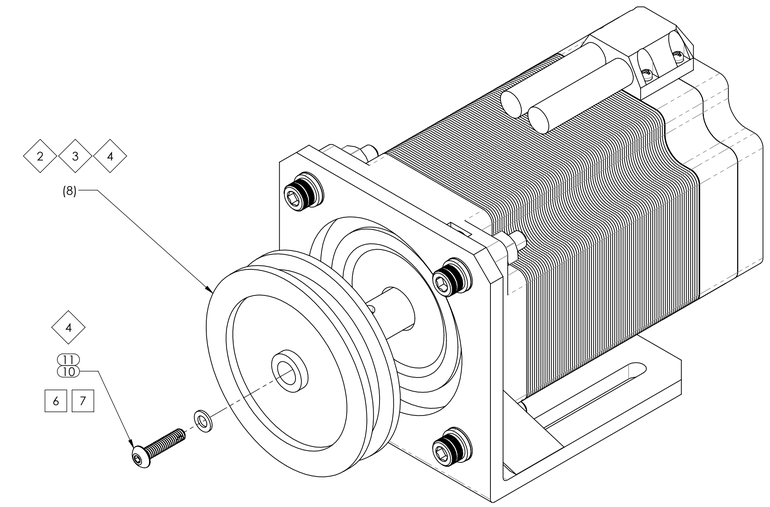

DRIVER SUBASSEMBLY

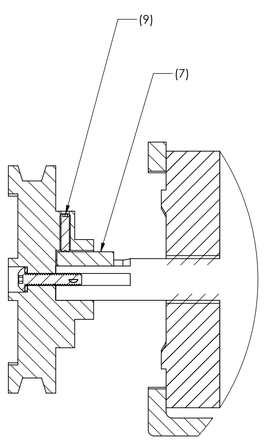

SECTION A-A
PULLEY TO MOTOR SHAFT CONNECTION

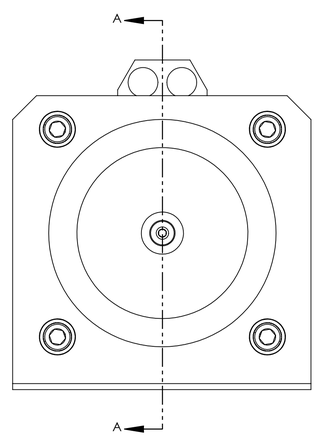

FRONT VIEW OF SUBASSEMBLY

DRAFTWORKS
BOSTON, MA

TITLE
DRIVER
SUBASSEMBLY

SIZE	DRAWING NUMBER	REV
D	20260425	A

SCALE: 1:2	CAD FILE	SHEET 3 OF 3

SOLIDWORKS Educational Product. For Instructional Use Only.